WUPS-012

2.

- UPS
- 24V/12V 24V/12V 12V
- 12V/1A
- 2000mAh(3.7V)

3.

3.1

3.1.1

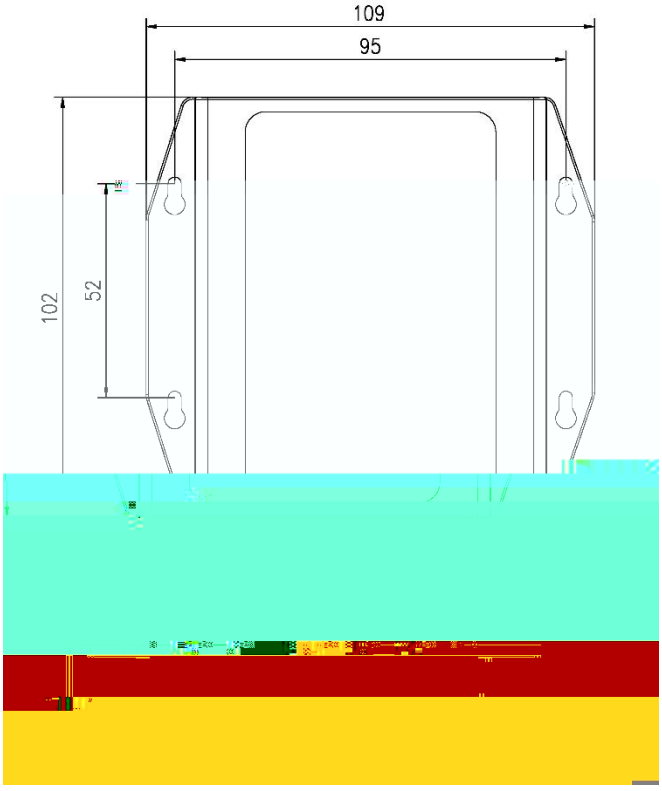

3 mm

3.1.2

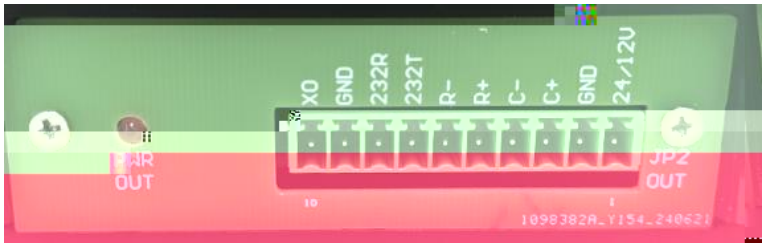

4

5

3.2

1

JP1 IN	3.81-10P ( )	JP1-1	24V/12V +
		JP1-2	24V/12V -
		JP1-3	JP2-3
		JP1-4	JP2-4
		JP1-5	JP2-5
		JP1-6	JP2-6
[redacted]		[redacted]	JP2-7
		JP1-8	JP2-8
[redacted]		JP1-9	JP2-9
		JP1-10	JP2-10

[redacted]

[redacted]